INDEX OF SHEETS

SHEET NO.	SHEET NAME	DESCRIPTION
1	CV-01	COVER SHEET
2	GN-01	GENERAL NOTES
3-5	DT-01 TO DT-03	DETAILS
6-10	IC-01 TO IC-05	INTERCONNECT PLANS
11	SY-01	SYSTEM/EQUIPMENT DIAGRAM
12-13	SC-01 TO SC-02	FIBER SPLICE DIAGRAMS

APPLICABLE 2022 CALTRANS STANDARD PLANS AND SPECIFICATIONS

RSP ES-1ARSP ES-1BRSP ES-1C
RSP ES-8A RSP ES-8B RSP ES-17A

RSSP 86.1.02(C)
RSSP 87.1.03(3)
RSSP 87-19

City of San Ramon

CITYWIDE INTELLIGENT TRANSPORTATION SYSTEM (ITS) UPGRADE PROJECT (CIP 975594)

BOLLINGER CANYON ROAD FROM DOUGHERTY ROAD (N) TO ALBION ROAD

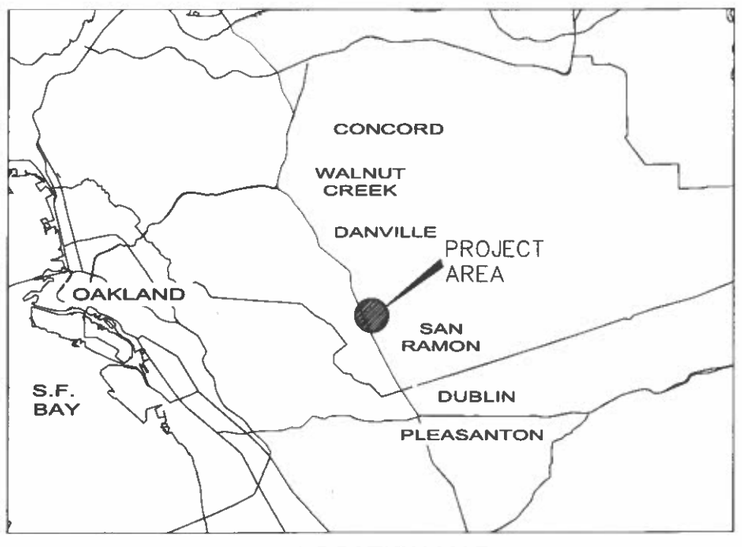

LOCATION MAP
N.T.S.

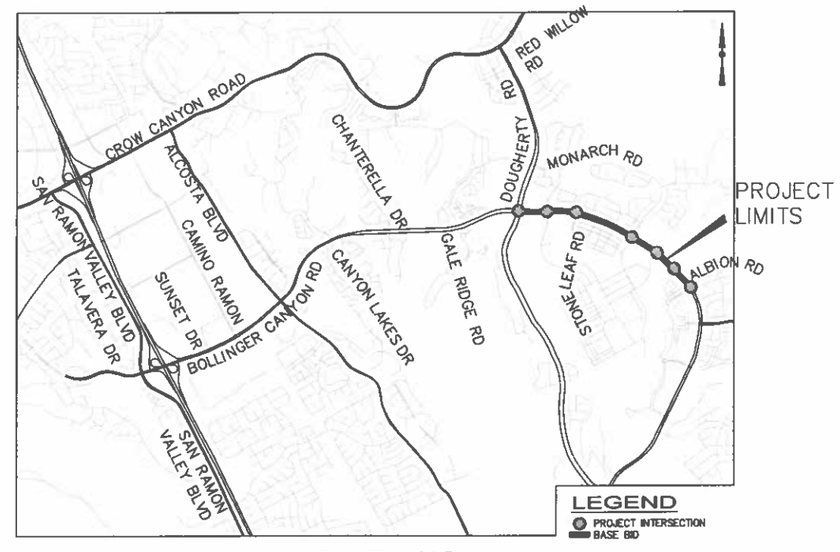

VICINITY MAP
N.T.S.

CITY COUNCIL MEMBERS
DAVE HUDSON – MAYOR
SCOTT PERKINS – VICE MAYOR
MARK ARMSTRONG
SRIDAR VEROSE
MARISOL RUBIO

CITY MANAGER
STEVEN SPEDOWFSKI

CA: 1-800-227-2600
CALL BEFORE YOU DIG
USA
UNDERGROUND SERVICE ALERT
CA: 1-800-227-2600
CALL TWO WORKING DAYS BEFORE YOU DIG

REVIEWED FOR CONFORMANCE WITH CITY OF SAN RAMON STANDARDS AND REQUIREMENTS. APPROVAL FOR CONSTRUCTION IS SUBJECT TO THE INFORMATION SHOWN HEREIN. CITY OF SAN RAMON AND THE UNDERSIGNED ARE NOT RESPONSIBLE FOR ANY ERRORS OR OMISSIONS THAT MAY EXIST ON THESE PLANS.

CITY APPROVAL BY:
BRIAN R. BORNSTEIN R.C.E. 59402 DATE 2-26-24
CITY ENGINEER

NO.	DESCRIPTION	REV DATE	BY

DESIGNED BY MWW
DRAWN BY KXR
CHECKED BY MWW
SCALE AS NOTED
DATE 03/22/2024

CITY OF SAN RAMON
ENGINEERING SERVICES DIVISION
7000 BOLLINGER CANYON ROAD
SAN RAMON, CALIFORNIA

REGISTERED PROFESSIONAL ENGINEER MATTHEW R. WEBER No. 62846 Exp. 9/30/24 CIVIL STATE OF CALIFORNIA

iteris
PLANS PREPARED BY:
MATTHEW WEBER, R.C.E. 62846
03/22/2024
DATE

CITY OF SAN RAMON
CITYWIDE INTELLIGENT TRANSPORTATION SYSTEM (ITS)
UPGRADE PROJECT (CIP 975594)

COVER SHEET

SHEET NUMBER 1 OF 13 SHEETS
DRAWING NO CV-01

GENERAL NOTES:

1. ALL WORK SHALL CONFORM TO THE CURRENT CITY OF SAN RAMON STANDARD PLANS AND SPECIFICATIONS AND THE LATEST PROVISIONS OF 2022 CALTRANS STANDARD PLANS. CITY STANDARD PLANS AND SPECIFICATIONS CAN BE OBTAINED FROM THE CITY'S WEBSITE AT: WWW.CI.SAN-RAMON.CA.US.

2. ALL EXISTING UTILITY LOCATIONS ARE APPROXIMATE. CONTRACTOR SHALL TAKE ALL PRECAUTIONARY MEASURES TO PROTECT THESE UTILITIES. CONTRACTOR SHALL NOT PERFORM ANY EXCAVATION UNTIL ALL UTILITY AGENCIES HAVE BEEN NOTIFIED AND HAVE BEEN GIVEN THE OPPORTUNITY TO MARK THEIR UNDERGROUND FACILITIES IN THE FIELD. CONTRACTOR SHALL CALL U.S.A. (800) 227-2600 AT LEAST 2 WORKING DAYS IN ADVANCE OF THE START OF CONSTRUCTION OF THE PROJECT. CONTRACTOR SHALL POTHOLE AND DETERMINE THE DEPTH OF ALL UTILITIES PRIOR TO CONSTRUCTION.

3. CONTRACTOR SHALL LOCATE AND PRESERVE ALL FACILITIES INCLUDING SEWER, WATER, GAS, IRRIGATION, POWER, STREET LIGHTS, TELEPHONE, SURVEY MARKERS AND OTHERS WHICH MAY BE IN AREA OF CONSTRUCTION. NOT ALL LATERALS ARE SHOWN ON THE PLANS. THE CONTRACTOR SHALL LOCATE AND MARK LATERALS PRIOR TO CONSTRUCTION.

4. IT IS INTENDED THAT THESE PLANS REQUIRE ALL LABOR AND MATERIALS NECESSARY FOR COMPLETION OF WORK IN ACCORDANCE WITH THEIR TRUE INTENT AND PURPOSE. CONTRACTOR SHALL NOTIFY ENGINEER IMMEDIATELY REGARDING ANY DISCREPANCIES OR AMBIGUITIES WHICH MAY EXIST IN PLANS OR SPECIFICATIONS. ENGINEER'S INTERPRETATION OR CORRECTION THEREOF SHALL BE FINAL AND CONCLUSIVE. WHERE PLANS OR SPECIFICATIONS DESCRIBE PORTIONS OF WORK IN GENERAL TERMS BUT NOT IN COMPLETE DETAIL, IT IS UNDERSTOOD THAT THE ENGINEER SHALL DETERMINE THE BEST GENERAL PRACTICE TO BE USED AND ONLY MATERIALS AND WORKMANSHIP OF FIRST QUALITY SHALL BE USED.

5. CONTRACTOR SHALL COMPLY WITH CITY'S DUST CONTROL ORDINANCE DURING ALL TIMES AT HIS OWN EXPENSE.

6. CONTRACTOR SHALL, AT ALL TIMES, KEEP WORK AREA IN A NEAT AND SAFE CONDITION. UPON COMPLETION OF ANY PORTION OF WORK, CONTRACTOR SHALL PROMPTLY REMOVE ALL ITS EQUIPMENT AND SURPLUS MATERIALS, UNLESS NOTED OTHERWISE IN THE SPECIFICATION. CONTRACTOR SHALL, AT OWN EXPENSE, DISPOSE OF ALL RUBBISH, UNUSED MATERIALS AND OTHER EQUIPMENT BELONGING TO CONTRACTOR OR USED IN PERFORMANCE OF WORK, TO THE SATISFACTION OF THE ENGINEER. AFTER COMPLETION OF THE PROJECT, CONTRACTOR SHALL LEAVE THE PROJECT SITE IN EQUAL OR BETTER CONDITION.

7. CONTRACTOR SHALL BE RESPONSIBLE FOR COORDINATING ADJUSTMENT OF ALL EXISTING UTILITIES (EXCEPT THOSE UTILITIES SPECIFICALLY IDENTIFIED IN THE PLANS TO BE RELOCATED BY OTHERS) WITH THE RESPECTIVE UTILITY COMPANIES AT NO ADDITIONAL COST.

8. CONTRACTOR SHALL ASSUME SOLE AND COMPLETE RESPONSIBILITY FOR JOB SITE CONDITION, PROTECTION OF PUBLIC AND PRIVATE PROPERTY ADJACENT TO WORK DURING THE CONSTRUCTION OF PROJECT.

9. CONTRACTOR SHALL NOT CLOSE OR DETOUR ANY TRAFFIC IN ANY MANNER UNLESS NOTED OTHERWISE IN PROJECT SPECIFICATIONS. ANY PROPOSAL FOR A LANE CLOSURE OR CLOSURE OF A CITY STREET SHALL BE SUBMITTED TO ENGINEER FOR APPROVAL IN WRITING. ACCESS TO NEIGHBORING PROPERTIES SHALL BE PROVIDED AT ALL TIMES DURING CONSTRUCTION.

10. PROPER TRAFFIC CONTROL SHALL BE MAINTAINED AT ALL TIMES DURING CONSTRUCTION IN ACCORDANCE WITH THE CALIFORNIA MUTCD. CONTRACTOR SHALL SUBMIT TRAFFIC CONTROL PLANS TO CITY FOR REVIEW AT PRE-CONSTRUCTION MEETING BEFORE STARTING ANY WORK. CONTRACTOR SHALL MAINTAIN PEDESTRIAN ACCESS AT ALL TIMES.

11. CONTRACTOR SHALL MAINTAIN ALL EXISTING SEWER AND WATER SERVICE TO PROPERTIES WITHIN CONSTRUCTION AREA AT ALL TIMES DURING CONSTRUCTION.

12. CONTRACTOR SHALL PROTECT IN PLACE ALL IRRIGATION EQUIPMENT WITHIN THE LIMITS OF WORK.

13. CONTRACTOR SHALL REPAIR AND OR REPLACE ALL LANDSCAPING, IRRIGATION SYSTEMS, SIDEWALKS, CURB, GUTTER, ETC. LOCATED BEYOND THE LIMITS OF WORK SHOWN ON THE PLANS, DAMAGED DURING CONSTRUCTION AT NO ADDITIONAL COST.

14. FOR CONDUIT INSTALLATION BY JACKING OR DRILLING, CONTRACTOR SHALL CONDUCT PRE- AND POST-VIDEO INSPECTIONS OF SEWER AND STORM DRAIN LATERALS WITHIN THE BORE PATH PRIOR TO INSTALLATION. ADDITIONALLY, CONTRACTOR SHALL VERIFY UTILITIES BY POTHOLING AND VISUAL INSPECTION TO CONFIRM DEPTH AND LOCATION OF UTILITIES. A BORE PATH PROFILE SHALL BE DEVELOPED AND SUBMITTED TO THE ENGINEER FOR REVIEW AND APPROVAL. SEE SPECIFICATIONS FOR FURTHER INFORMATION.

LEGEND

PROPOSED	EXISTING	
		CURB
		CONTROLLER CABINET
		PULL BOX
		CONDUIT
		N48 PULL BOX
		ASSUMED R/W
	SS	SANITARY SEWER LINE AND MANHOLE
	SD	STORM SEWER LINE, MANHOLE, AND STORM DRAIN
	W	WATER LINE
	E	ELECTRICAL LINE
	G	GAS LINE
	T	TELEPHONE LINE
		SURVEY MONUMENT

ABBREVIATIONS

CIP	CAPITAL IMPROVEMENT PROGRAM
DLC	LOOP DETECTOR LEAD-IN CABLE
EX.	EXISTING
HDPE	HIGH-DENSITY POLYETHYLENE
MAX	MAXIMUM
MIN	MINIMUM
MT	EMPTY
N.T.S	NOT-TO-SCALE
SIC	SIGNAL INTERCONNECT
TC	TRAFFIC CONTROL
TYP.	TYPICAL

KEY MAP

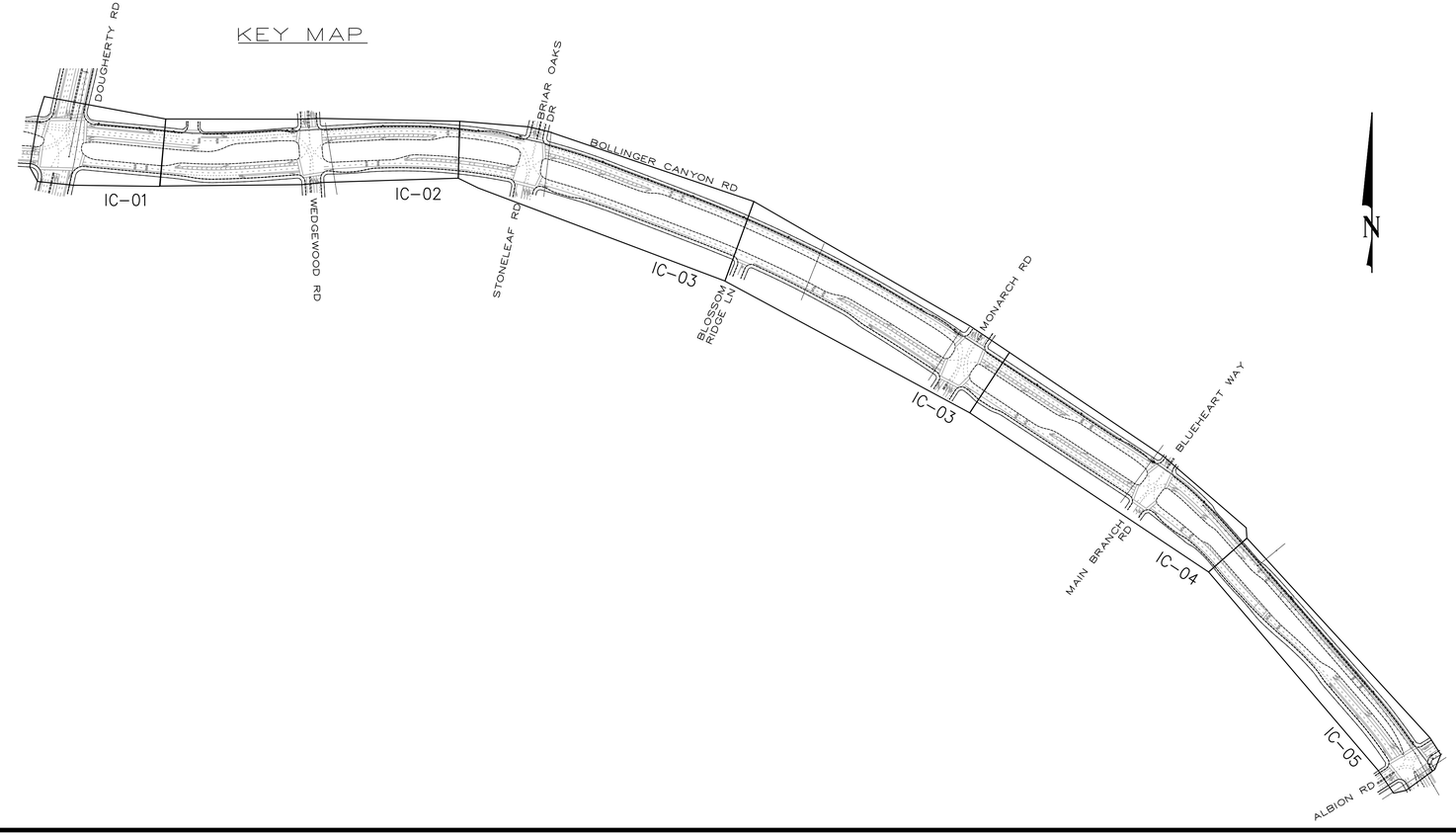

CA: 1-800-227-2600
CALL BEFORE YOU DIG
USA
UNDERGROUND SERVICE ALERT
CA: 1-800-227-2600
CALL TWO WORKING DAYS BEFORE YOU DIG

REV	DATE	DESCRIPTION	BY

DESIGNED BY MWW
DRAWN BY KAZ
CHECKED BY MWW
SCALE AS NOTED
DATE FEBRUARY 2024

CITY OF SAN RAMON
ENGINEERING SERVICES DIVISION
7000 BOLLINGER CANYON ROAD
SAN RAMON, CALIFORNIA

REGISTERED PROFESSIONAL ENGINEER
MATTHEW W. WADES
No. 82548
Exp. 9/30/24
CIVIL
STATE OF CALIFORNIA

01/21/2024
DATE

PLANS PREPARED BY:
iteris
1700 Carnegie Ave.
Suite 100
Santa Ana, CA 92705-5551
MATTHEW WADES, R.C.E. 82548

CITY OF SAN RAMON
CITYWIDE INTELLIGENT TRANSPORTATION SYSTEM (ITS)
UPGRADE PROJECT (CIP 975594)

GENERAL NOTES

SHEET NUMBER 2
OF 13 SHEETS
DRAWING NO
GN-01

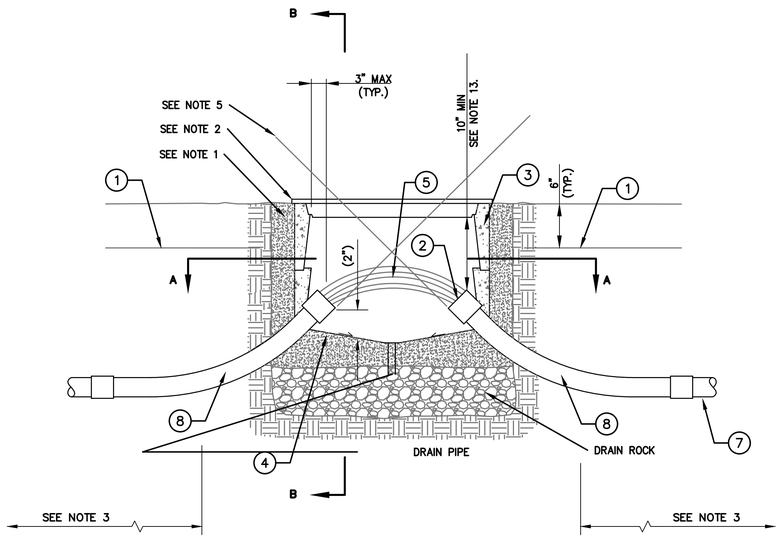

CONDUIT SWEEP DETAIL

N.T.S.

TABLE	
ITEM	DESCRIPTION
1	WARNING TAPE (IF OPEN TRENCHING)
2	CONDUIT BELL END (TYPICAL)
3	NO. 6(E) PULL BOX WITH EXCEPTIONS AS DRAWN
4	CLEAN CRUSHED ROCK SUMP PER SPECIFICATIONS
5	COMMUNICATION CABLE AS REQUIRED
6	8"x12" KNOCK OUT. GROUT AND FINISH OPENINGS AFTER CONDUIT IS INSTALLED.
7	SCHEDULE 40 HDPE CONDUIT (SEE PLANS FOR SIZE AND QUANTITY)
8	45 DEGREE HDPE ELBOW, 36" RADIUS

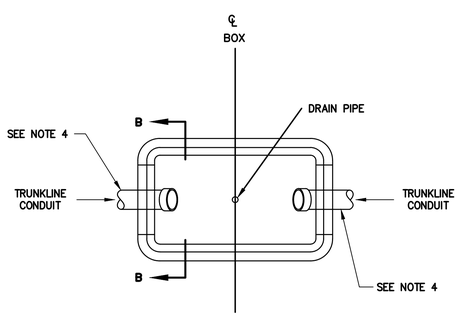

SECTION A-A

N.T.S.

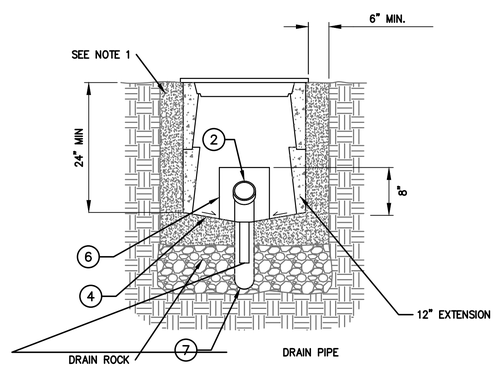

SECTION B-B

N.T.S.

NO. 6 PULL BOX WITH EXTENSION DETAIL (6E)

N.T.S.

NOTES:

1. BACKFILL ACCORDING TO CITY OF SAN RAMON STANDARD SPECIFICATIONS AND DETAILS.
2. "CITY FIBER OPTIC" SHALL BE INTEGRATED IN THE LID.
3. CONDUIT FROM THE TYPICAL TRENCH SECTION SHOULD NOT DEFLECT BY MORE THAN 1 FOOT PER 10 FEET FROM THE ALIGNMENT PRECEDING OR FOLLOWING THE PULL BOX.
4. SEE PLAN SHEETS FOR NUMBER AND SIZE OF CONDUIT. IF MORE THAN 3 CONDUIT ARE REQUIRED IN THE SAME KNOCKOUT, KNOCKOUT SHALL BE WIDENED TO 0.5" MORE THAN THE COMBINED CONDUIT WIDTH.
5. END OF CONDUIT SHALL BE ALIGNED TO EXIT TOP OF PULL BOX TO FACILITATE CABLE PULLING.
6. NUMBERS IN CIRCLES REFER TO ITEMS IN THE TABLE.
7. IF EXISTING CONDUIT IS USED, THE CONTRACTOR SHALL MODIFY CONDUIT SWEEPS (IF NEEDED) AS SHOWN. IF NEW CONDUIT IS USED, THE CONTRACTOR SHALL INSTALL SCHEDULE 40 HDPE CONDUIT WITH SWEEP AS SHOWN.
8. PULL BOX HEIGHT ABOVE FINISHED GRADE SHALL PERMIT 1" OF SURFACE LANDSCAPING, IF APPLICABLE, TO MATCH EXISTING CONDITIONS.
9. NO. 6(E) PULL BOX SHALL BE POLYMER REINFORCED CONCRETE AND HAVE A ANSI/SCTE-77 TIER 22 RATING.
10. ALL METALLIC CONDUIT SHALL HAVE GROUND BUSHINGS. ALL PVC AND HDPE CONDUIT SHALL HAVE BELL ENDS.
11. ALL CONDUIT SHALL ENTER THE SHORT SIDE OF THE PULL BOX UNLESS OTHERWISE APPROVED OR DIRECTED BY THE ENGINEER.
12. AFTER FIBER OPTIC CABLES HAVE BEEN INSTALLED, THE ENDS OF CONDUITS TERMINATING IN PULL BOXES AND VAULTS SHALL BE SEALED WITH A SEALING COMPOUND APPROVED BY THE CITY.
13. PULL BOXES SHALL NOT BE INSTALLED IN CURB RAMPS OR DRIVEWAYS (INCLUDING WINGS/FLARES.)

CA: 1-800-227-2600
CALL BEFORE YOU DIG
USA
UNDERGROUND SERVICE ALERT
CA: 1-800-227-2600
CALL TWO WORKING DAYS BEFORE YOU DIG

REV	DATE	DESCRIPTION	BY

DESIGNED BY MWW
DRAWN BY JAVIER
CHECKED BY MWW
SCALE AS NOTED
DATE FEBRUARY 2024

CITY OF SAN RAMON
ENGINEERING SERVICES DIVISION
7000 BOLLINGER CANYON ROAD
SAN RAMON, CALIFORNIA

REGISTERED PROFESSIONAL ENGINEER
MATTHEW W. WAGES
No. 82548
Exp. 3/31/24
CIVIL
STATE OF CALIFORNIA

02/22/2024
DATE

PLANS PREPARED BY:
iteris
1700 Carnegie Ave., Suite 100
Santa Ana, CA 92705-5551
Phone: 714.558.8141
Fax: 714.558.8157
Contact: Cy Ashby, PE
Email: cashby@iteris.com

MATTHEW WAGES, R.C.E. 82548

CITY OF SAN RAMON
CITYWIDE INTELLIGENT TRANSPORTATION SYSTEM (ITS)
UPGRADE PROJECT (CIP 975594)

DETAILS

SHEET NUMBER 3
OF 13 SHEETS
DRAWING NO
DT-01

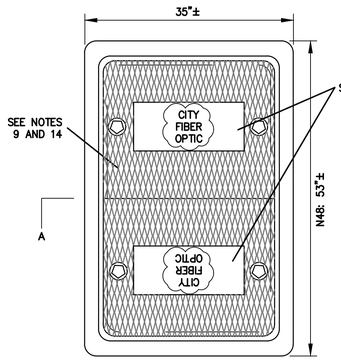

PLAN VIEW
NOT TO SCALE

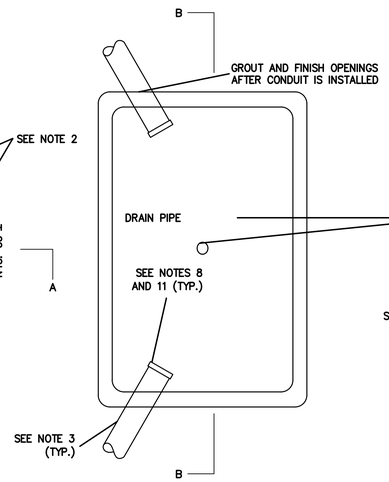

PLAN VIEW
N.T.S.

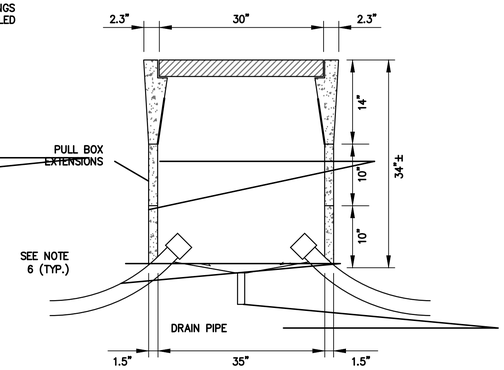

SECTION A-A
N.T.S.

TABLE	
ITEM	DESCRIPTION
1	WARNING TAPE (IF OPEN TRENCHING)
2	FIBER OPTIC SPLICE BOX WITH LID
3	CLEAN CRUSHED ROCK SUMP PER SPECIFICATIONS
4	FIBER OPTIC CABLE, AS REQUIRED
5	SCHEDULE 40 HDPE CONDUIT (SEE PLANS FOR SIZE AND QUANTITY) "SCH 40 HDPE"
6	45 DEGREE ELBOW, 36" RADIUS (TO MATCH CONDUIT TYPE AND SIZE)

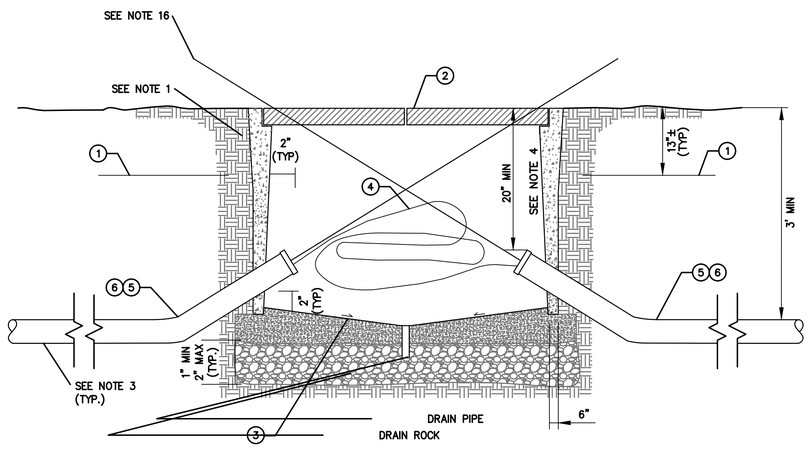

SECTION B-B
N.T.S.

NOTES:

1. BACKFILL ACCORDING TO THE CITY OF SAN RAMON STANDARD SPECIFICATIONS AND DETAILS.
2. "CITY FIBER OPTIC" SHALL BE INTEGRATED ON THE LID.
3. CONDUIT FROM THE TYPICAL BORE OR TRENCH SECTION SHOULD NOT DEFLECT BY MORE THAN 1 FOOT OF DEFLECTION PER 10 FEET OF CONDUIT RUN FROM THE ALIGNMENT PRECEDING OR FOLLOWING THE VAULT.
4. TOP OF TRUNKLINE CONDUIT ENTERING THROUGH THE SIDE OF THE VAULT SHALL BE LOCATED AT LEAST 20" BELOW EXISTING FINISHED GROUND.
5. NUMBERS IN CIRCLES REFER TO ITEMS IN THE TABLE.
6. IF EXISTING CONDUIT IS USED FOR PROJECT FIBER, THE CONTRACTOR SHALL MODIFY CONDUIT SWEEPS TO ALIGN WITH TOP OF VAULT AS SHOWN. IF NEW CONDUIT IS USED, THE CONTRACTOR SHALL INSTALL SCHEDULE 40 HDPE CONDUIT WITH SWEEP WITH A MAXIMUM ANGLE OF 45 DEGREES.
7. VAULT HEIGHT ABOVE FINISHED GRADE SHALL PERMIT 1" OF SURFACE LANDSCAPING, IF APPLICABLE, TO MATCH EXISTING CONDITIONS.
8. EXCESS CONDUIT FOR ALL CONDUIT ENDS SHALL BE CUT BACK TO PROVIDE STUB ENDS OF 1" MIN. AND 2" MAX.
9. LOCKING MECHANISM SHALL BE PROVIDED FOR COVER. FOUR 3/4" PENTA HEAD BOLTS SHALL BE USED. TWO 3/4" PENTA HEAD SOCKETS AND RATCHET SHALL BE PROVIDED TO THE CITY.
10. FIBER OPTIC VAULT, VAULT COVER, AND VAULT EXTENSIONS SHALL BE POLYMER AND SHALL SUPPORT A MINIMUM TEST LOAD OF 12,500 LBS. IF VAULT IS LOCATED IN A TRAVELED WAY, ALL COMPONENTS SHALL CONFORM TO VERTICAL PROOF-LOAD STRENGTH REQUIREMENTS PER THE STATE OF CALIFORNIA DEPARTMENT OF TRANSPORTATION STANDARD SPECIFICATIONS (2018), SECTION 86-1.02C.
11. ALL METALLIC CONDUIT SHALL HAVE GROUND BUSHINGS. ALL PVC AND HDPE CONDUITS SHALL HAVE BELL ENDS.
12. CONDUITS SHALL ENTER THROUGH KNOCKOUTS.
13. FURNISH AND INSTALL CAPS OR PLUGS FOR ALL UNUSED CONDUIT.
14. CONTRACTOR MAY ELECT TO PROVIDE A SINGLE POLYMER VAULT WITH 34" DEPTH AND OMIT THE TWO 10" VAULT EXTENSIONS.
15. BOTTOM OF CONDUIT CENTERLINE SHALL BE ALIGNED TO EXIT TOP OF VAULT TO FACILITATE CABLE PULLING.
16. VAULTS SHALL BE INSTALLED TO ALIGN WITH AND BE PARALLEL OR PERPENDICULAR TO SIDEWALK EDGES AND SCORE LINES.
17. AFTER FIBER OPTIC CABLES HAVE BEEN INSTALLED, THE ENDS OF CONDUITS TERMINATING IN PULL BOXES AND VAULTS SHALL BE SEALED WITH A SEALING COMPOUND APPROVED BY THE CITY.

N48 FIBER OPTIC VAULT DETAIL
N.T.S.

CA: 1-800-227-2600
CALL BEFORE YOU DIG
UNDERGROUND SERVICE ALERT
CA: 1-800-227-2600
CALL TWO WORKING DAYS BEFORE YOU DIG

REV	DATE	DESCRIPTION	BY

DESIGNED BY MWW
DRAWN BY KWZ
CHECKED BY MWW
SCALE AS NOTED
DATE FEBRUARY 2024

CITY OF SAN RAMON
ENGINEERING SERVICES DIVISION
7000 BOLLINGER CANYON ROAD
SAN RAMON, CALIFORNIA

REGISTERED PROFESSIONAL ENGINEER
MATTHEW W. WAGES
No. 82548
Exp. 9/30/24
CIVIL
STATE OF CALIFORNIA

02/22/2024
DATE

PLANS PREPARED BY:
iteris
1700 Carnegie Ave, Suite 100
Santa Ana, CA 92705-5551
Phone: 714.558.8100
MATTHEW WAGES, R.C.E. 82548

CITY OF SAN RAMON
CITYWIDE INTELLIGENT TRANSPORTATION SYSTEM (ITS)
UPGRADE PROJECT (CIP 975594)

DETAILS

SHEET NUMBER 4
OF 13 SHEETS
DRAWING NO
DT-02

PERMANENT FIBER OPTIC
CABLE MARKER

(PAVED AREAS)

FIBER CONDUIT AND CABLE MARKER DETAIL

FIBER OPTIC GENERAL NOTES: (ALL IC & SC SHEETS)

1. ALL WORK AND MATERIALS SHALL COMPLY WITH THE LATEST REVISIONS OF THE 2022 STATE OF CALIFORNIA DEPARTMENT OF TRANSPORTATION (CALTRANS) STANDARD PLANS AND STANDARD SPECIFICATIONS, AND CITY OF SAN RAMON STANDARD DETAILS AND STANDARD SPECIFICATIONS.
2. REFER TO CALTRANS STANDARD PLANS RSP ES-1A, RSP ES-1B, AND RSP ES-1C FOR KEY TO SYMBOLS AND ABBREVIATIONS.
3. ALL CONDUITS CROSSING THE TRAVELED WAY SHALL BE INSTALLED BY DIRECTIONAL DRILLING OR JACKING AND BORING METHODS.
4. LOCATIONS OF PULL BOXES, CONDUIT, AND EQUIPMENT ARE SCHEMATIC UNLESS OTHERWISE NOTED. BEFORE BEGINNING ANY CONSTRUCTION OPERATION, THE CONTRACTOR SHALL CHECK FOR CONFLICTS WITH UNDERGROUND UTILITIES, OVERHEAD UTILITIES, OR OTHER OBSTACLES. CONDUIT ALIGNMENTS AND PULL BOX LOCATIONS STAKED BY THE CONTRACTOR ARE SUBJECT TO APPROVALS BY THE CITY BEFORE BEGINNING WORK ON THAT ITEM.
5. SEE "SC" DRAWINGS FOR FIBER OPTIC SPLICING DETAILS AND FIBER OPTIC CONNECTION DIAGRAM.
6. ALL PULL BOXES SHALL HAVE A PULL BOX MARKER INSTALLED AS SHOWN BY THE DETAIL ON THIS DRAWING. ALL FIBER CABLE SHALL HAVE A FIBER CABLE MARKER INSTALLED AS SHOWN ON THIS DRAWING. ONE CABLE MARKER SHALL BE INSTALLED PER CABLE RUN, APPROXIMATELY IN THE MIDDLE BETWEEN TWO PULL BOXES.
7. CONTRACTOR SHALL COIL FIBER OPTIC CABLE SLACK AS FOLLOWS: 100 FEET OF 288-STRAND SLACK AND 50 FEET OF 12-STRAND (BRANCH CABLE) SLACK IN N48 PULL BOXES, 10 FEET OF 12-STRAND SLACK IN HOME RUN PULL BOXES, 20 FEET OF 12-STRAND SLACK IN BASE OF CONTROLLER CABINETS, AND 10 FEET OF 288-STRAND SLACK IN PASS-THROUGH 6E PULL BOXES.
8. INSTALL SOLID #10 AWG GROUND/TRACE WIRE AND BOND IT TO GROUND ROD AT EACH SIGNALIZED INTERSECTION IN ALL NEW CONDUITS WHERE FIBER OPTIC CABLE IS BEING INSTALLED. GROUND/TRACE WIRE SHALL HAVE GREEN INSULATION.
9. ALL NEW PULL BOXES SHALL BE #6 WITH EXTENSION OR AS SHOWN ON THE PROJECT PLANS.
10. EXISTING FIBER OPTIC CABLE TO REMAIN LIVE. CONTRACTOR SHALL USE CAUTION NOT TO DAMAGE EXISTING FIBER OPTIC CABLE. CONTRACTOR SHALL REPLACE FIBER OPTIC CABLE IF EXISTING BECOME DAMAGED AS A RESULT OF CONSTRUCTION ACTIVITY.
11. PRESERVE AND PROTECT EXISTING FACILITIES.

CA: 1-800-227-2600
CALL BEFORE YOU DIG
USA
UNDERGROUND SERVICE ALERT
CA: 1-800-227-2600
CALL TWO WORKING DAYS BEFORE YOU DIG

REV	DATE	DESCRIPTION	BY

DESIGNED BY MWW
DRAWN BY DAVE
CHECKED BY MWW
SCALE AS NOTED
DATE FEBRUARY 2024

CITY OF SAN RAMON
ENGINEERING SERVICES DIVISION
7000 BOLLINGER CANYON ROAD
SAN RAMON, CALIFORNIA

REGISTERED PROFESSIONAL ENGINEER
MATTHEW W. WAGES
No. 82548
Exp. 3/30/24
CIVIL
STATE OF CALIFORNIA

02/22/2024
DATE

PLANS PREPARED BY:
iteris
1700 Carnegie Ave., Suite 100
Santa Ana, CA 92705-5551
Phone: 714.884.7131
Fax: 714.884.7220
MATTHEW WAGES, R.C.E. 82548

CITY OF SAN RAMON
CITYWIDE INTELLIGENT TRANSPORTATION SYSTEM (ITS)
UPGRADE PROJECT (CIP 975594)

DETAILS

SHEET NUMBER 5
OF 13 SHEETS
DRAWING NO
DT-03

CONSTRUCTION NOTES: (THIS SHEET ONLY)

2 FURNISH AND INSTALL NEW 288-STRAND FIBER OPTIC TRUNK CABLE WITH 1#10 TRACE WIRE AND MULE TAPE IN EXISTING CONDUIT.

4 REMOVE EXISTING COPPER INTERCONNECT CABLE(S). PROTECT ALL OTHER CONDUCTORS AND CABLES IN THE SAME CONDUIT. IF EXISTING CONDUCTORS BECOME DAMAGED DUE TO REMOVAL PROCESS, CONTRACTOR SHALL REPLACE THEM AT NO COST TO THE CITY.

7 REMOVE EXISTING PULL BOX. FURNISH AND INSTALL NEW NO. 6E PULL BOX PER DETAIL ON DT-01.

21 SPLICE TRUNK AND DROP CABLES IN ACCORDANCE WITH FIBER SPLICE DETAIL AS SHOWN ON THE CORRESPONDING "SC" DRAWING.

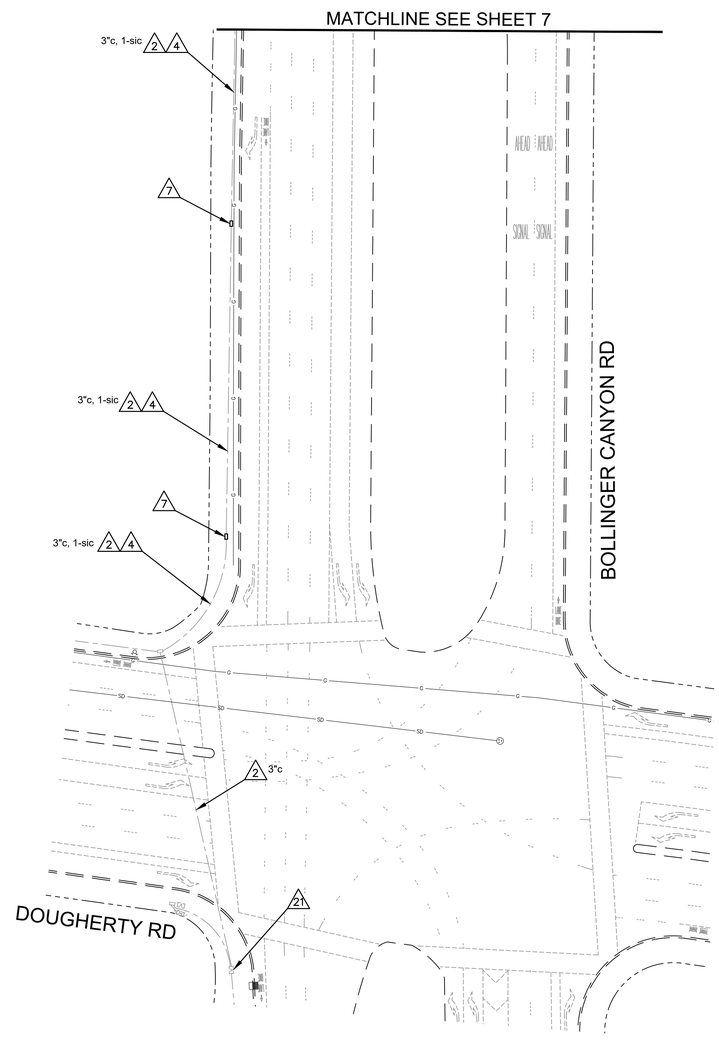

GRAPHIC SCALE

40 0 20 40 80

1 INCH = 40 FEET

CA: 1-800-227-2600
CALL BEFORE YOU DIG
USA
UNDERGROUND SERVICE ALERT
CA: 1-800-227-2600
CALL TWO WORKING DAYS BEFORE YOU DIG

REV	DATE	DESCRIPTION	BY

DESIGNED BY MWW
DRAWN BY DAVE
CHECKED BY MWW
SCALE AS NOTED
DATE FEBRUARY 2024

CITY OF SAN RAMON
ENGINEERING SERVICES DIVISION
7000 BOLLINGER CANYON ROAD
SAN RAMON, CALIFORNIA

REGISTERED PROFESSIONAL ENGINEER
MATTHEW W. WAGES
No. 82548
Exp. 9/30/24
CIVIL
STATE OF CALIFORNIA

02/22/2024
DATE

PLANS PREPARED BY:
iteris
1700 Carnegie Ave., Suite 100
Santa Ana, CA 92705-5551
Phone: 714.558.7411
Fax: 714.558.7469
MATTHEW WAGES, R.C.E. 82548

CITY OF SAN RAMON
CITYWIDE INTELLIGENT TRANSPORTATION SYSTEM (ITS) UPGRADE PROJECT (CIP 975594)
DOUGHERTY RD FROM 650' S/O MONARCH RD BOLLINGER CYN RD 650' E/O WEDGEWOOD RD

INTERCONNECT PLAN

SHEET NUMBER 6
OF 13 SHEETS
DRAWING NO IC-01

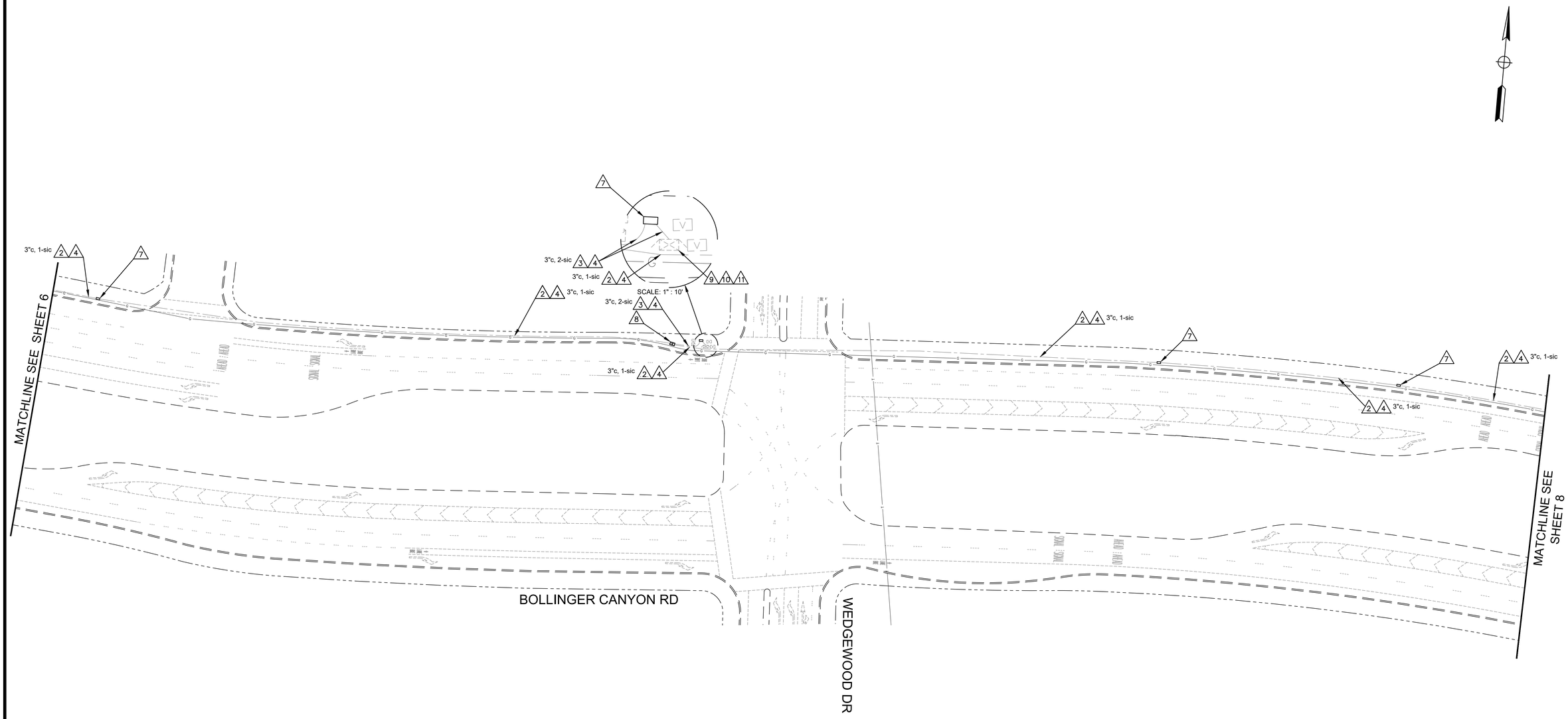

CONSTRUCTION NOTES: (THIS SHEET ONLY)

2. FURNISH AND INSTALL NEW 288-STRAND FIBER OPTIC TRUNK CABLE WITH 1#10 TRACE WIRE AND MULE TAPE IN EXISTING CONDUIT.
3. FURNISH AND INSTALL12-STRAND SINGLE MODE FIBER OPTIC DROP CABLE WITH 1#10 TRACE WIRE AND MULE TAPE IN EXISTING CONDUIT.
4. REMOVE EXISTING COPPER INTERCONNECT CABLE(S). PROTECT ALL OTHER CONDUCTORS AND CABLES IN THE SAME CONDUIT. IF EXISTING CONDUCTORS BECOME DAMAGED DUE TO REMOVAL PROCESS, CONTRACTOR SHALL REPLACE THEM AT NO COST TO THE CITY.
7. REMOVE EXISTING PULL BOX. FURNISH AND INSTALL NEW NO. 6E PULL BOX PER DETAIL ON DT-01.
8. REMOVE EXISTING PULL BOX. FURNISH AND INSTALL NEW N48 PULL BOX PER DETAIL ON DT-01. FURNISH AND INSTALL SPLICE CLOSURE. SPLICE TRUNK AND DROP CABLES IN ACCORDANCE WITH FIBER SPLICE DETAIL AS SHOWN ON THE CORRESPONDING "SC" DRAWING.
9. FURNISH AND INSTALL FIBER DISTRIBUTION UNIT IN CONTROLLER CABINET. TERMINATE DROP CABLE AS SHOWN ON THE CORRESPONDING "SC" DRAWING.
10. FURNISH AND INSTALL ETHERNET SWITCH IN CONTROLLER CABINET. CONNECT ETHERNET SWITCH TO DISTRIBUTION UNIT AND TRAFFIC SIGNAL CONTROLLER. CONNECT VIDEO DETECTION, CCTV CAMERAS, BATTERY BACKUP, ETC., IF PRESENT, TO ETHERNET SWITCH. MAKE ALL CONNECTIONS PER FIBER SPLICING DIAGRAMS ON CORRESPONDING "SC" DRAWINGS.
11. REMOVE AND SALVAGE EXISTING ETHERNET OVER COPPER SWITCH.

CA: 1-800-227-2600
CALL BEFORE YOU DIG
USA
UNDERGROUND SERVICE ALERT
CA: 1-800-227-2600
CALL TWO WORKING DAYS BEFORE YOU DIG

GRAPHIC SCALE
40 0 20 40 80
1 INCH = 40 FEET

REV	DATE	DESCRIPTION	BY

DESIGNED BY MWW
DRAWN BY MWW
CHECKED BY MWW
SCALE AS NOTED
DATE FEBRUARY 2024

CITY OF SAN RAMON
ENGINEERING SERVICES DIVISION
7000 BOLLINGER CANYON ROAD
SAN RAMON, CALIFORNIA

REGISTERED PROFESSIONAL ENGINEER
MATTHEW W. WAGES
No. 82548
Exp. 3/30/24
CIVIL
STATE OF CALIFORNIA

02/22/2024
DATE

PLANS PREPARED BY:
iteris
1700 Carnegie Ave., Suite 100
Santa Ana, CA 92705-5551
Phone: 714.558.7400
MATTHEW WAGES, R.C.E. 82548

CITY OF SAN RAMON
CITYWIDE INTELLIGENT TRANSPORTATION SYSTEM (ITS) UPGRADE PROJECT (CIP 975594)
DOUGHERTY RD FROM 650' S/O MONARCH RD BOLLINGER CYN RD 650' E/O WEDGEWOOD RD

INTERCONNECT PLAN

SHEET NUMBER 7
OF 13 SHEETS
DRAWING NO IC-02

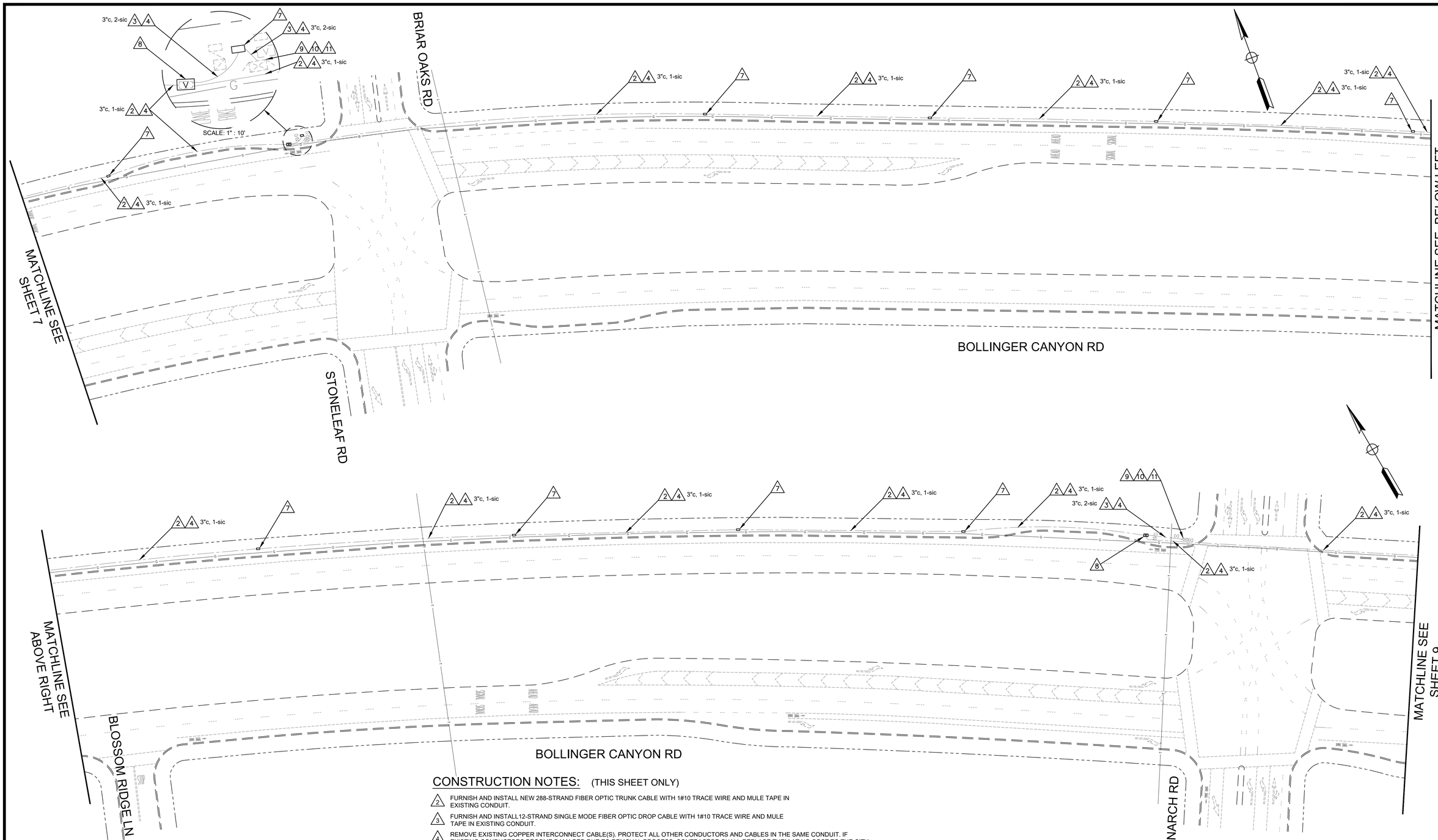

CONSTRUCTION NOTES: (THIS SHEET ONLY)

2. FURNISH AND INSTALL NEW 288-STRAND FIBER OPTIC TRUNK CABLE WITH 1#10 TRACE WIRE AND MULE TAPE IN EXISTING CONDUIT.
3. FURNISH AND INSTALL12-STRAND SINGLE MODE FIBER OPTIC DROP CABLE WITH 1#10 TRACE WIRE AND MULE TAPE IN EXISTING CONDUIT.
4. REMOVE EXISTING COPPER INTERCONNECT CABLE(S). PROTECT ALL OTHER CONDUCTORS AND CABLES IN THE SAME CONDUIT. IF EXISTING CONDUCTORS BECOME DAMAGED DUE TO REMOVAL PROCESS, CONTRACTOR SHALL REPLACE THEM AT NO COST TO THE CITY.
7. REMOVE EXISTING PULL BOX. FURNISH AND INSTALL NEW NO. 6E PULL BOX PER DETAIL ON DT-01.
8. REMOVE EXISTING PULL BOX. FURNISH AND INSTALL NEW N48 PULL BOX PER DETAIL ON DT-01. FURNISH AND INSTALL SPLICE CLOSURE. SPLICE TRUNK AND DROP CABLES IN ACCORDANCE WITH FIBER SPLICE DETAIL AS SHOWN ON THE CORRESPONDING "SC" DRAWING.
9. FURNISH AND INSTALL FIBER DISTRIBUTION UNIT IN CONTROLLER CABINET. TERMINATE DROP CABLE AS SHOWN ON THE CORRESPONDING "SC" DRAWING.
10. FURNISH AND INSTALL ETHERNET SWITCH IN CONTROLLER CABINET. CONNECT ETHERNET SWITCH TO DISTRIBUTION UNIT AND TRAFFIC SIGNAL CONTROLLER. CONNECT VIDEO DETECTION, CCTV CAMERAS, BATTERY BACKUP, ETC., IF PRESENT, TO ETHERNET SWITCH. MAKE ALL CONNECTIONS PER FIBER SPLICING DIAGRAMS ON CORRESPONDING "SC" DRAWINGS.
11. REMOVE AND SALVAGE EXISTING ETHERNET OVER COPPER SWITCH.

CA: 1-800-227-2600
CALL BEFORE YOU DIG
USA
UNDERGROUND SERVICE ALERT
CA: 1-800-227-2600
CALL TWO WORKING DAYS BEFORE YOU DIG

GRAPHIC SCALE
40 0 20 40 80
1 INCH = 40 FEET

REV	DATE	DESCRIPTION	BY

DESIGNED BY MWW
DRAWN BY KKZ
CHECKED BY MWW
SCALE AS NOTED
DATE FEBRUARY 2024

CITY OF SAN RAMON
ENGINEERING SERVICES DIVISION
7000 BOLLINGER CANYON ROAD
SAN RAMON, CALIFORNIA

REGISTERED PROFESSIONAL ENGINEER
MATTHEW W. WAGES
No. 82548
Exp. 9/30/24
CIVIL
STATE OF CALIFORNIA

02/22/2024
DATE

PLANS PREPARED BY:
iteris
1700 Carnegie Avenue, Suite 100
Santa Ana, CA 92705-5551
Phone: 714.558.8085

MATTHEW WAGES, R.C.E. 82548

CITY OF SAN RAMON
CITYWIDE INTELLIGENT TRANSPORTATION SYSTEM (ITS)
UPGRADE PROJECT (CIP 975594)
BOLLINGER CYN RD FROM 650' E/O WEDGEWOOD RD TO MONARCH RD

INTERCONNECT PLAN

SHEET NUMBER 8
OF 13 SHEETS
DRAWING NO IC-03

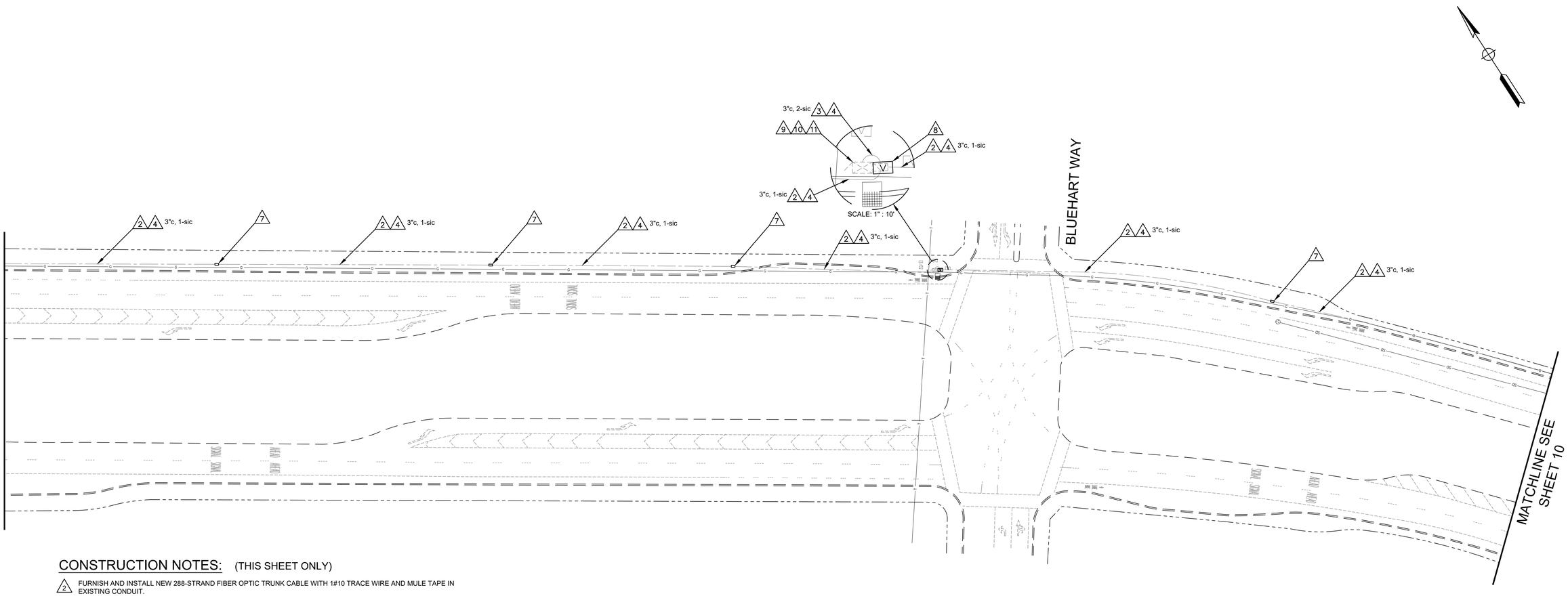

CONSTRUCTION NOTES: (THIS SHEET ONLY)

2. FURNISH AND INSTALL NEW 288-STRAND FIBER OPTIC TRUNK CABLE WITH 1#10 TRACE WIRE AND MULE TAPE IN EXISTING CONDUIT.
3. FURNISH AND INSTALL12-STRAND SINGLE MODE FIBER OPTIC DROP CABLE WITH 1#10 TRACE WIRE AND MULE TAPE IN EXISTING CONDUIT.
4. REMOVE EXISTING COPPER INTERCONNECT CABLE(S). PROTECT ALL OTHER CONDUCTORS AND CABLES IN THE SAME CONDUIT. IF EXISTING CONDUCTORS BECOME DAMAGED DUE TO REMOVAL PROCESS, CONTRACTOR SHALL REPLACE THEM AT NO COST TO THE CITY.
7. REMOVE EXISTING PULL BOX. FURNISH AND INSTALL NEW NO. 6E PULL BOX PER DETAIL ON DT-01.
8. REMOVE EXISTING PULL BOX. FURNISH AND INSTALL NEW N48 PULL BOX PER DETAIL ON DT-01. FURNISH AND INSTALL SPLICE CLOSURE. SPLICE TRUNK AND DROP CABLES IN ACCORDANCE WITH FIBER SPLICE DETAIL AS SHOWN ON THE CORRESPONDING "SC" DRAWING.
9. FURNISH AND INSTALL FIBER DISTRIBUTION UNIT IN CONTROLLER CABINET. TERMINATE DROP CABLE AS SHOWN ON THE CORRESPONDING "SC" DRAWING.
10. FURNISH AND INSTALL ETHERNET SWITCH IN CONTROLLER CABINET. CONNECT ETHERNET SWITCH TO DISTRIBUTION UNIT AND TRAFFIC SIGNAL CONTROLLER. CONNECT VIDEO DETECTION, CCTV CAMERAS, BATTERY BACKUP, ETC., IF PRESENT, TO ETHERNET SWITCH. MAKE ALL CONNECTIONS PER FIBER SPLICING DIAGRAMS ON CORRESPONDING "SC" DRAWINGS.
11. REMOVE AND SALVAGE EXISTING ETHERNET OVER COPPER SWITCH.

CA: 1-800-227-2600
CALL BEFORE YOU DIG
USA
UNDERGROUND SERVICE ALERT
CA: 1-800-227-2600
CALL TWO WORKING DAYS BEFORE YOU DIG

GRAPHIC SCALE
40 0 20 40 80
1 INCH = 40 FEET

REV	DATE	DESCRIPTION	BY

DESIGNED BY MWW
DRAWN BY MWW
CHECKED BY MWW
SCALE AS NOTED
DATE FEBRUARY 2024

CITY OF SAN RAMON
ENGINEERING SERVICES DIVISION
7000 BOLLINGER CANYON ROAD
SAN RAMON, CALIFORNIA

REGISTERED PROFESSIONAL ENGINEER
MATTHEW W. WAGES
No. 82548
Exp. 9/30/24
CIVIL
STATE OF CALIFORNIA

02/23/2024
DATE

PLANS PREPARED BY:
iteris
1700 Carnegie Ave., Suite 100
Santa Ana, CA 92705-5551
Phone: (714) 884-7136
Contact: Dr. Gabriel Gomez

MATTHEW WAGES, R.C.E. 82548

CITY OF SAN RAMON
CITYWIDE INTELLIGENT TRANSPORTATION SYSTEM (ITS)
UPGRADE PROJECT (CIP 975594)
BOLLINGER CYN RD FROM MONARCH RD TO 450' E/O BLUEHART WAY

INTERCONNECT PLAN

SHEET NUMBER 9
OF 13 SHEETS
DRAWING NO IC-04

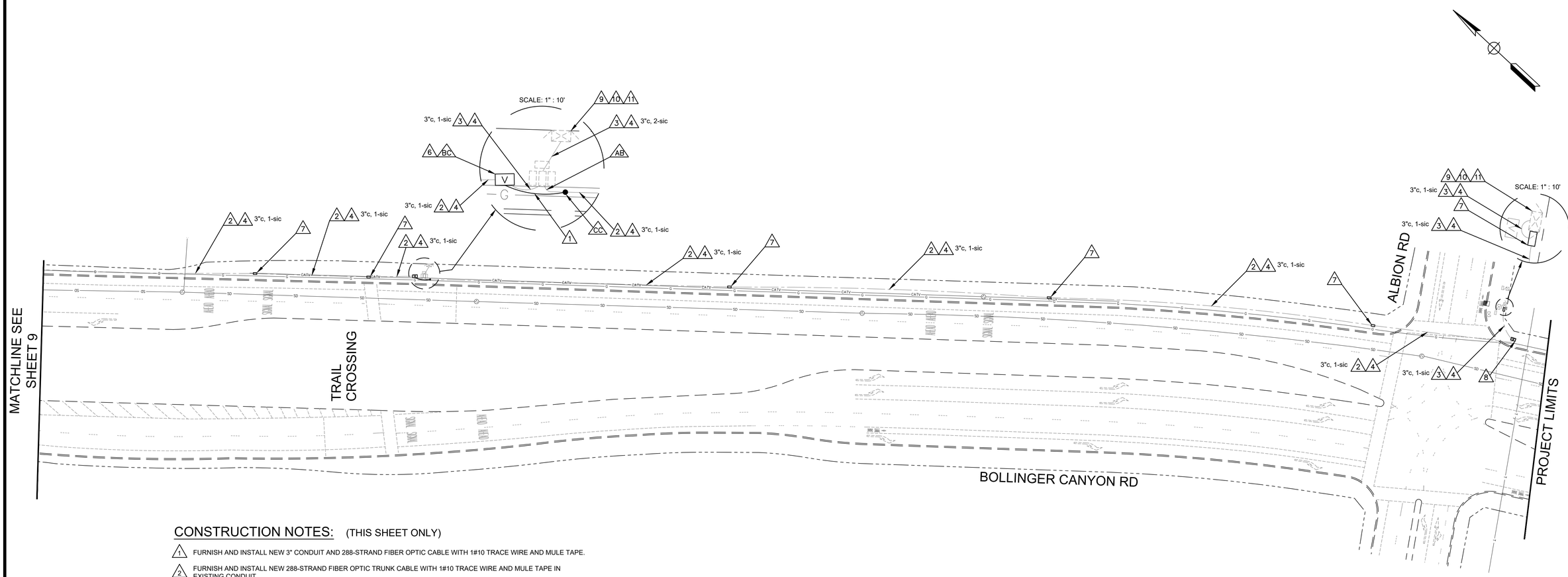

CONSTRUCTION NOTES: (THIS SHEET ONLY)

1. FURNISH AND INSTALL NEW 3" CONDUIT AND 288-STRAND FIBER OPTIC CABLE WITH 1#10 TRACE WIRE AND MULE TAPE.
2. FURNISH AND INSTALL NEW 288-STRAND FIBER OPTIC TRUNK CABLE WITH 1#10 TRACE WIRE AND MULE TAPE IN EXISTING CONDUIT.
3. FURNISH AND INSTALL12-STRAND SINGLE MODE FIBER OPTIC DROP CABLE WITH 1#10 TRACE WIRE AND MULE TAPE IN EXISTING CONDUIT.
4. REMOVE EXISTING COPPER INTERCONNECT CABLE(S). PROTECT ALL OTHER CONDUCTORS AND CABLES IN THE SAME CONDUIT. IF EXISTING CONDUCTORS BECOME DAMAGED DUE TO REMOVAL PROCESS, CONTRACTOR SHALL REPLACE THEM AT NO COST TO THE CITY.
6. FURNISH AND INSTALL TYPE N48 PULL BOX AND FIBER OPTIC SPLICE CLOSURE. SPLICE TRUNK AND DROP CABLES IN ACCORDANCE WITH FIBER SPLICE DETAIL AS SHOWN ON THE CORRESPONDING "SC" DRAWING.
7. REMOVE EXISTING PULL BOX. FURNISH AND INSTALL NEW NO. 6E PULL BOX PER DETAIL ON DT-01.
8. REMOVE EXISTING PULL BOX. FURNISH AND INSTALL NEW N48 PULL BOX PER DETAIL ON DT-01. FURNISH AND INSTALL SPLICE CLOSURE. SPLICE TRUNK AND DROP CABLES IN ACCORDANCE WITH FIBER SPLICE DETAIL AS SHOWN ON THE CORRESPONDING "SC" DRAWING.
9. FURNISH AND INSTALL FIBER DISTRIBUTION UNIT IN CONTROLLER CABINET. TERMINATE DROP CABLE AS SHOWN ON THE CORRESPONDING "SC" DRAWING.
10. FURNISH AND INSTALL ETHERNET SWITCH IN CONTROLLER CABINET. CONNECT ETHERNET SWITCH TO DISTRIBUTION UNIT AND TRAFFIC SIGNAL CONTROLLER. CONNECT VIDEO DETECTION, CCTV CAMERAS, BATTERY BACKUP, ETC., IF PRESENT, TO ETHERNET SWITCH. MAKE ALL CONNECTIONS PER FIBER SPLICING DIAGRAMS ON CORRESPONDING "SC" DRAWINGS.
11. REMOVE AND SALVAGE EXISTING ETHERNET OVER COPPER SWITCH.

CA: 1-800-227-2600
CALL BEFORE YOU DIG
UNDERGROUND SERVICE ALERT
CA: 1-800-227-2600
CALL TWO WORKING DAYS BEFORE YOU DIG

GRAPHIC SCALE
40 0 20 40 80
1 INCH = 40 FEET

REV	DATE	DESCRIPTION	BY

DESIGNED BY MWW
DRAWN BY MWW
CHECKED BY MWW
SCALE AS NOTED
DATE FEBRUARY 2024

CITY OF SAN RAMON
ENGINEERING SERVICES DIVISION
7000 BOLLINGER CANYON ROAD
SAN RAMON, CALIFORNIA

REGISTERED PROFESSIONAL ENGINEER
MATTHEW W. WAGES
No. 82548
Exp. 9/30/24
CIVIL
STATE OF CALIFORNIA

02/22/2024
DATE

PLANS PREPARED BY:
iteris
1700 Carnegie Ave.
Suite 100
Santa Ana, CA 92705-5551
MATTHEW WAGES, R.C.E. 82548

CITY OF SAN RAMON
CITYWIDE INTELLIGENT TRANSPORTATION SYSTEM (ITS) UPGRADE PROJECT (CIP 975594)
BOLLINGER CYN RD 450' E/O BLUEHART WAY TO ALBION RD

INTERCONNECT PLAN

SHEET NUMBER 10
OF 13 SHEETS
DRAWING NO IC-05

LEGEND

- 288-STRAND SMFO CABLE (TRUNK)
- 12-STRAND SMFO CABLE (BRANCH)
- EXISTING FIBER OPTIC CABLE
- EXISTING EQUIPMENT
- PROPOSED EQUIPMENT

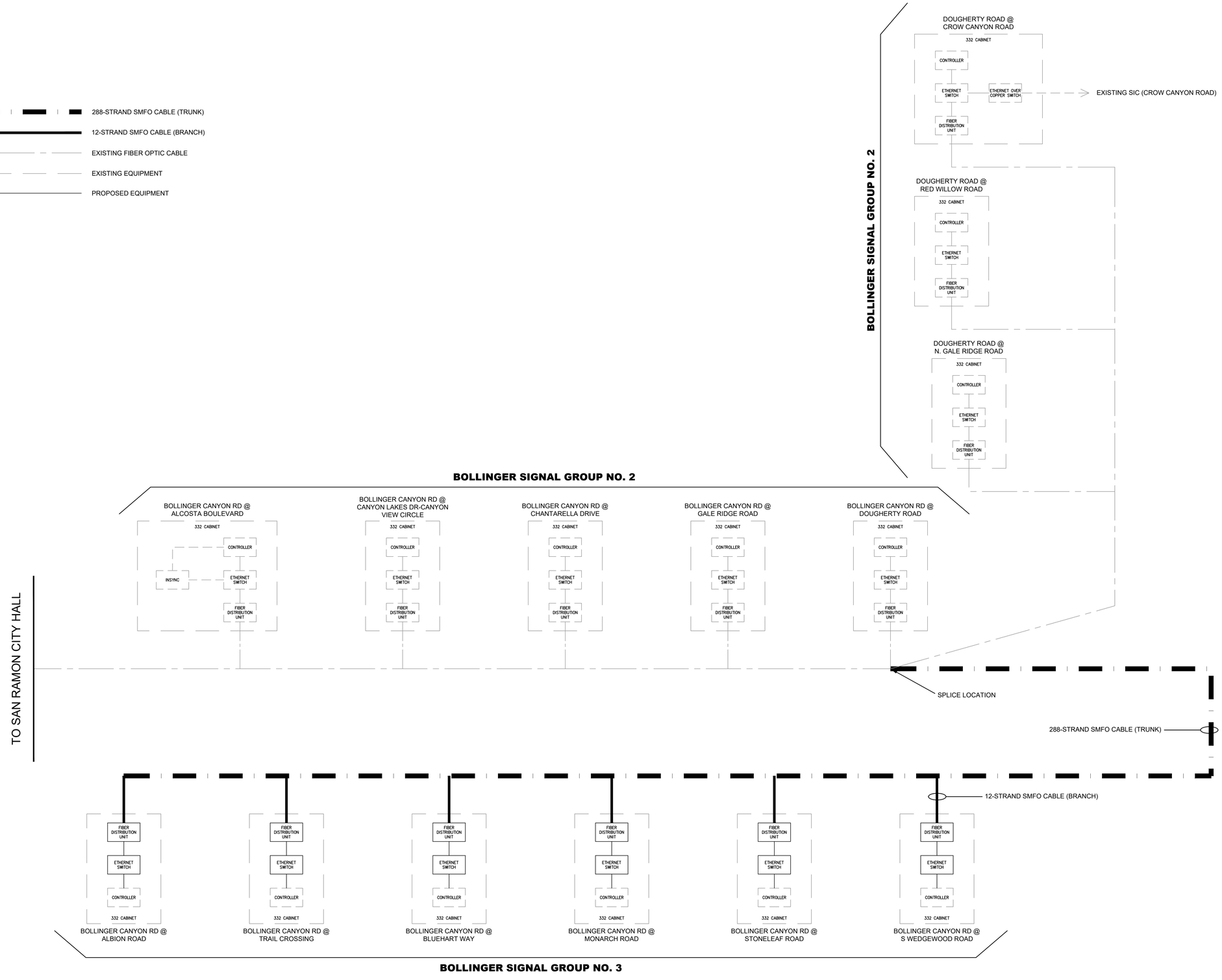

CA: 1-800-227-2600
CALL BEFORE YOU DIG
USA
UNDERGROUND SERVICE ALERT
CA: 1-800-227-2600
CALL TWO WORKING DAYS BEFORE YOU DIG

REV	DATE	DESCRIPTION	BY
			MWW

DESIGNED BY MWW
DRAWN BY PAYZE
CHECKED BY MWW
SCALE AS NOTED
DATE FEBRUARY 2024

CITY OF SAN RAMON
ENGINEERING SERVICES DIVISION
7000 BOLLINGER CANYON ROAD
SAN RAMON, CALIFORNIA

REGISTERED PROFESSIONAL ENGINEER
MATTHEW W. WAGES
No. 82548
Exp. 3/30/24
CIVIL
STATE OF CALIFORNIA

02/22/2024
DATE

PLANS PREPARED BY:
iteris
1700 Carnegie Ave, Suite 100
Santa Ana, CA 92705-5551
Phone: 714.558.8100
Fax: 714.558.8101
MATTHEW WAGES, R.C.E. 82548

CITY OF SAN RAMON
CITYWIDE INTELLIGENT TRANSPORTATION SYSTEM (ITS) UPGRADE PROJECT (CIP 975594)
BOLLINGER SIGNAL GROUP NO. 2 AND NO. 3

SYSTEM/EQUIPMENT DIAGRAM

SHEET NUMBER 11
OF 13 SHEETS
DRAWING NO SY-01

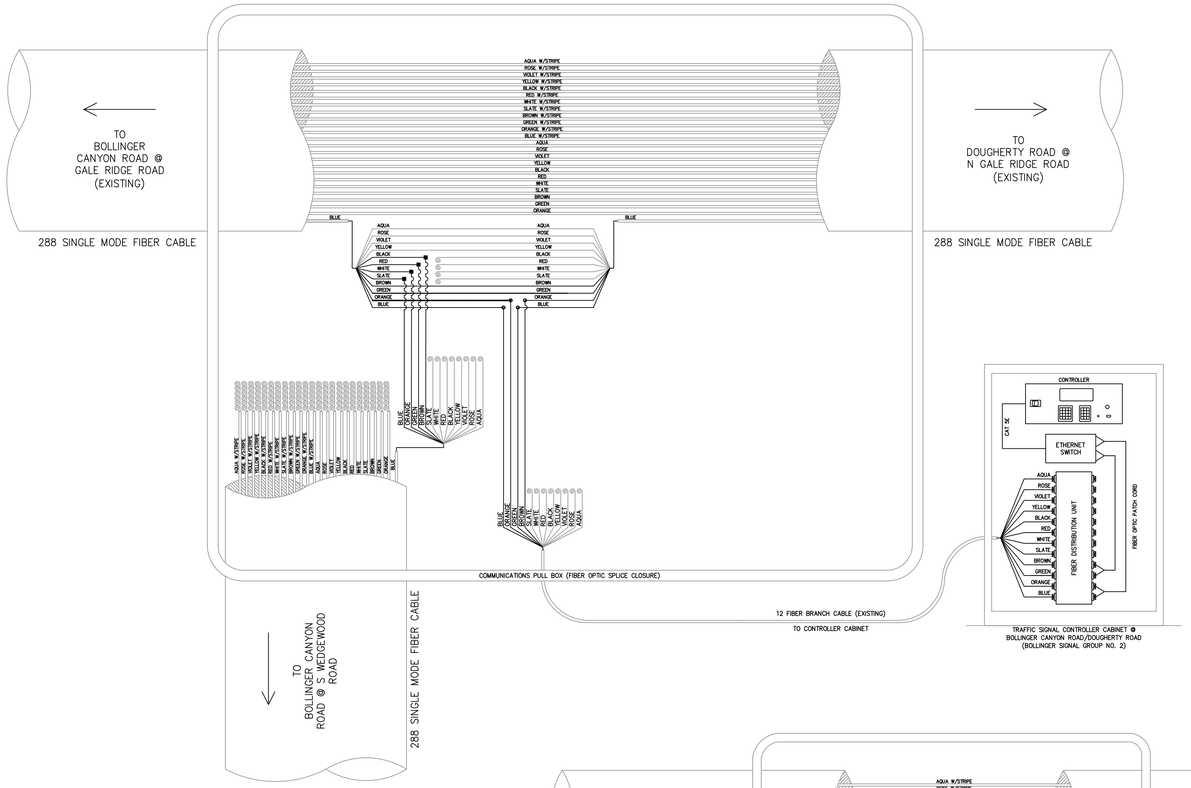

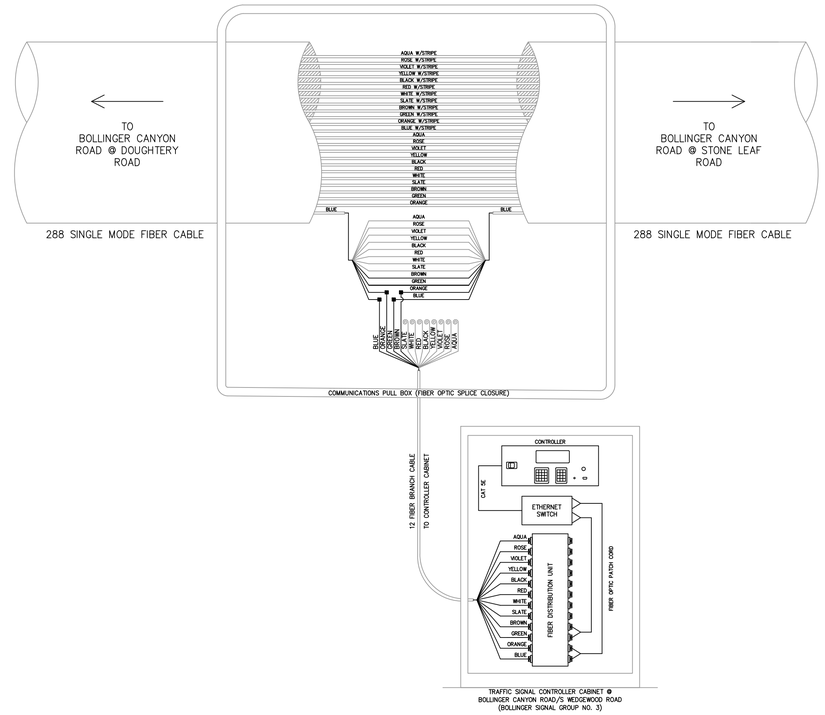

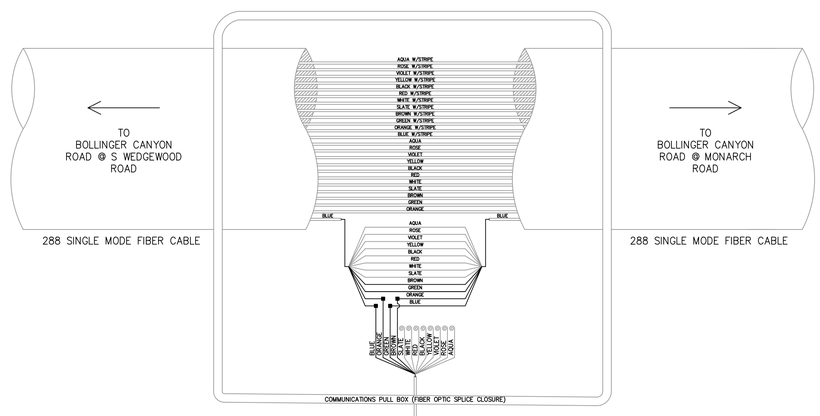

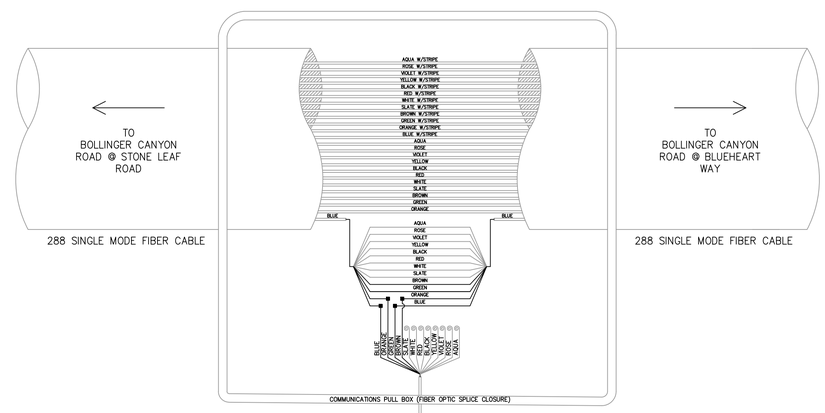

LEGEND

- EXISTING SPLICE
- PROPOSED SPLICE
- NON-TERMINATED FIBER

CA: 1-800-227-2600
CALL BEFORE YOU DIG
USA
UNDERGROUND SERVICE ALERT
CA: 1-800-227-2600
CALL TWO WORKING DAYS BEFORE YOU DIG

REV	DATE	DESCRIPTION	BY
			MWW

DESIGNED BY MWW
DRAWN BY MWW
CHECKED BY MWW
SCALE AS NOTED
DATE FEBRUARY 2024

CITY OF SAN RAMON
ENGINEERING SERVICES DIVISION
7000 BOLLINGER CANYON ROAD
SAN RAMON, CALIFORNIA

REGISTERED PROFESSIONAL ENGINEER
MATTHEW W. WADES
No. 82548
Exp. 9/30/24
CIVIL
STATE OF CALIFORNIA

02/21/2024
DATE

PLANS PREPARED BY:
iteris
Intelligent Transportation Systems
Planning Consultant
Design Consultant
Construction Support
MATTHEW WADES, R.C.E. 82548

CITY OF SAN RAMON
CITYWIDE INTELLIGENT TRANSPORTATION SYSTEM (ITS)
UPGRADE PROJECT (CIP 975594)
BOILLINGER CYN RD FROM DOUGHERTY RD TO MONARCH RD

FIBER SPLICE DIAGRAMS

SHEET NUMBER 12
OF 13 SHEETS
DRAWING NO SC-01

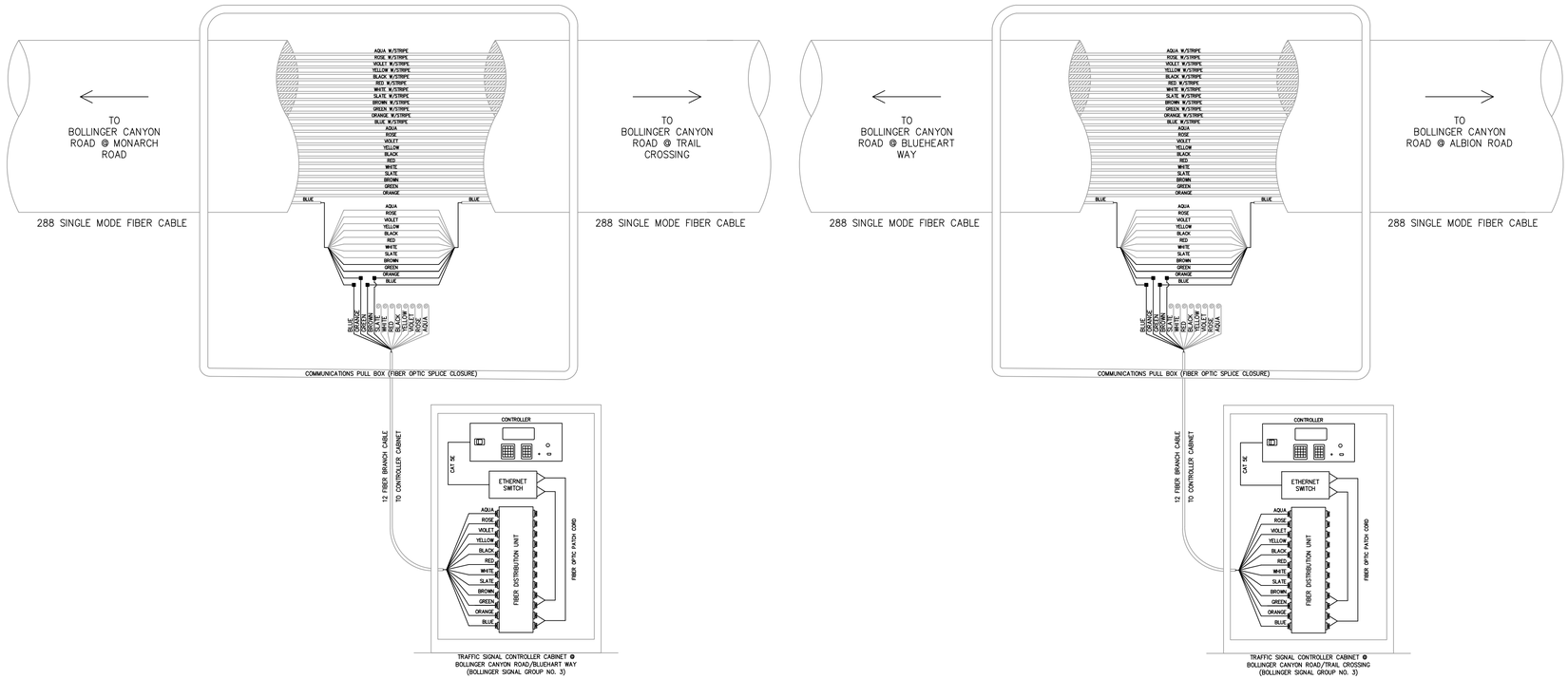

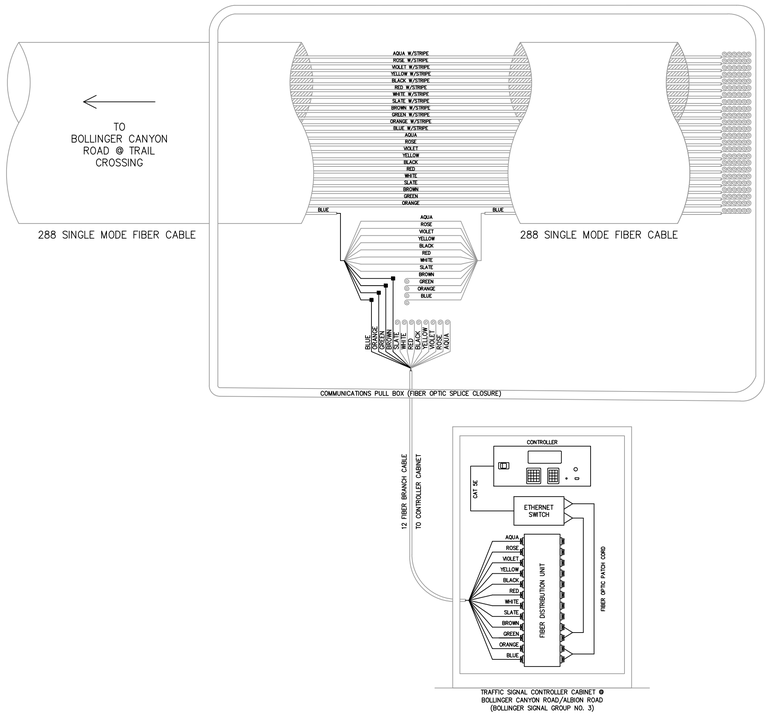

LEGEND

- ▪ BID ALTERNATE 1 PROPOSED SPLICE
- NON-TERMINATED FIBER

CA: 1-800-227-2600
CALL BEFORE YOU DIG
USA
UNDERGROUND SERVICE ALERT
CA: 1-800-227-2600
CALL TWO WORKING DAYS BEFORE YOU DIG

REV	DATE	DESCRIPTION	BY
			MWW

DESIGNED BY MWW
DRAWN BY MWW
CHECKED BY MWW
SCALE AS NOTED
DATE FEBRUARY 2024

CITY OF SAN RAMON
ENGINEERING SERVICES DIVISION
7000 BOLLINGER CANYON ROAD
SAN RAMON, CALIFORNIA

REGISTERED PROFESSIONAL ENGINEER
MATTHEW W. WAGES
No. 82548
Exp. 3/30/24
CIVIL
STATE OF CALIFORNIA

02/22/2024
DATE

PLANS PREPARED BY:
iteris
1700 Carnegie Avenue, Suite 100
Santa Ana, CA 92705-5551
Phone: 714.558.8100
Fax: 714.558.8101
Author: Chris Lamb
Phone: 714.558.8100

MATTHEW WAGES, R.C.E. 82548

CITY OF SAN RAMON
CITYWIDE INTELLIGENT TRANSPORTATION SYSTEM (ITS)
UPGRADE PROJECT (CIP 975594)
BOILLINGER CYN RD FROM BLUEHART WAY TO ALBION RD

FIBER SPLICE DIAGRAMS

SHEET NUMBER 13
OF 13 SHEETS
DRAWING NO
SC-02